A

55d vs 45d

BIOSYNTHESIS OF AMINO ACIDS

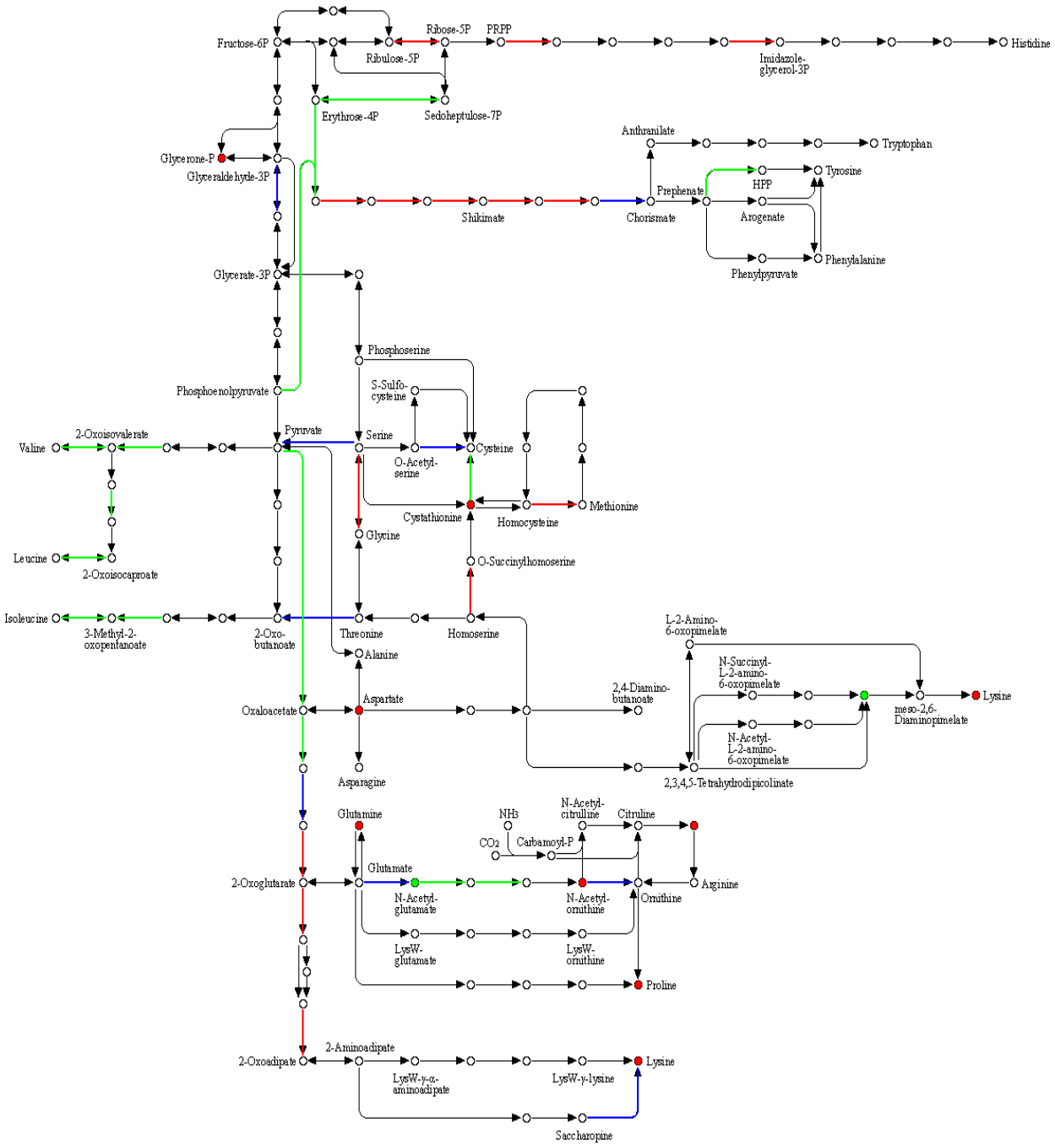

B

65d vs 45d

BIOSYNTHESIS OF AMINO ACIDS

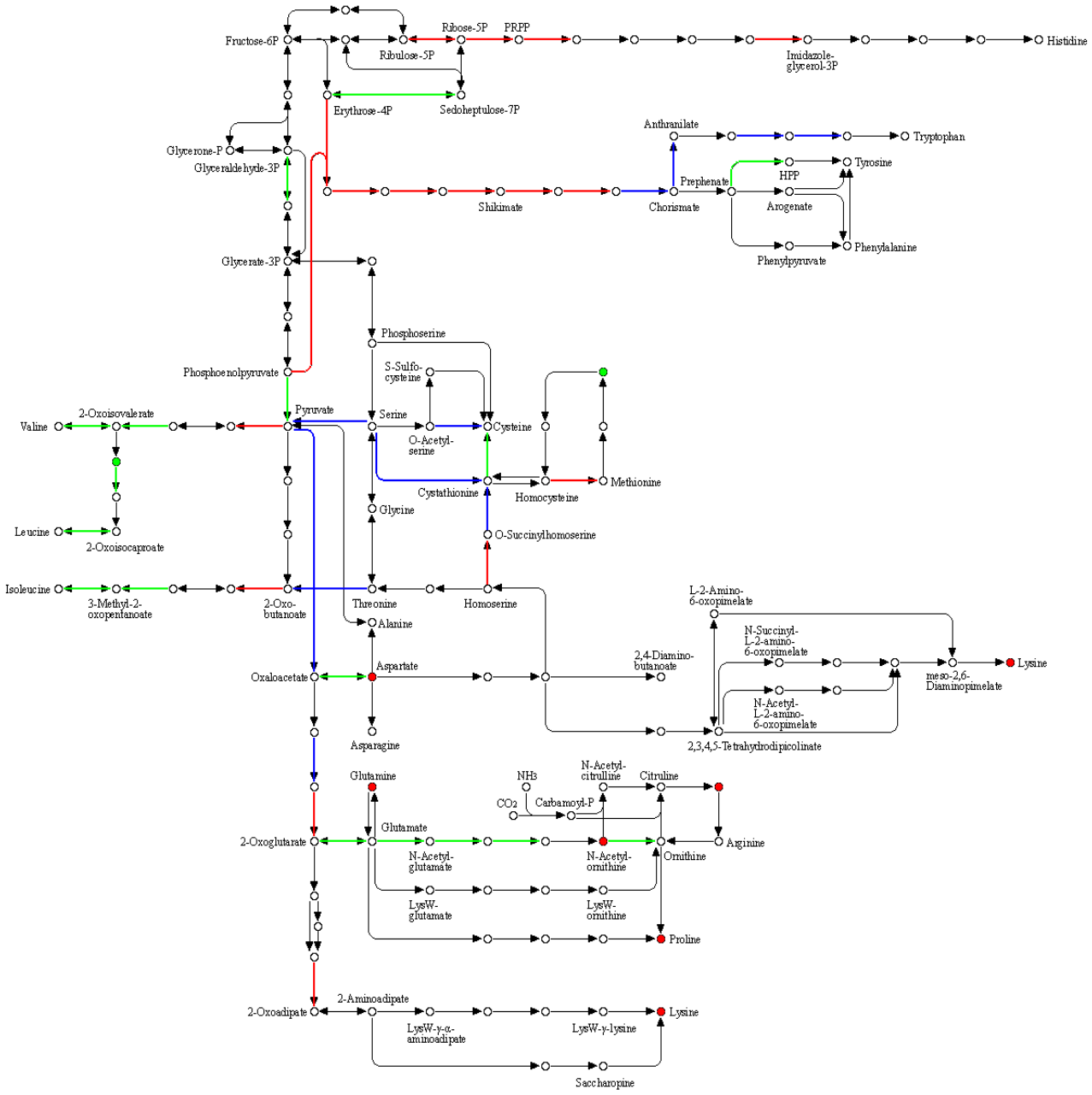

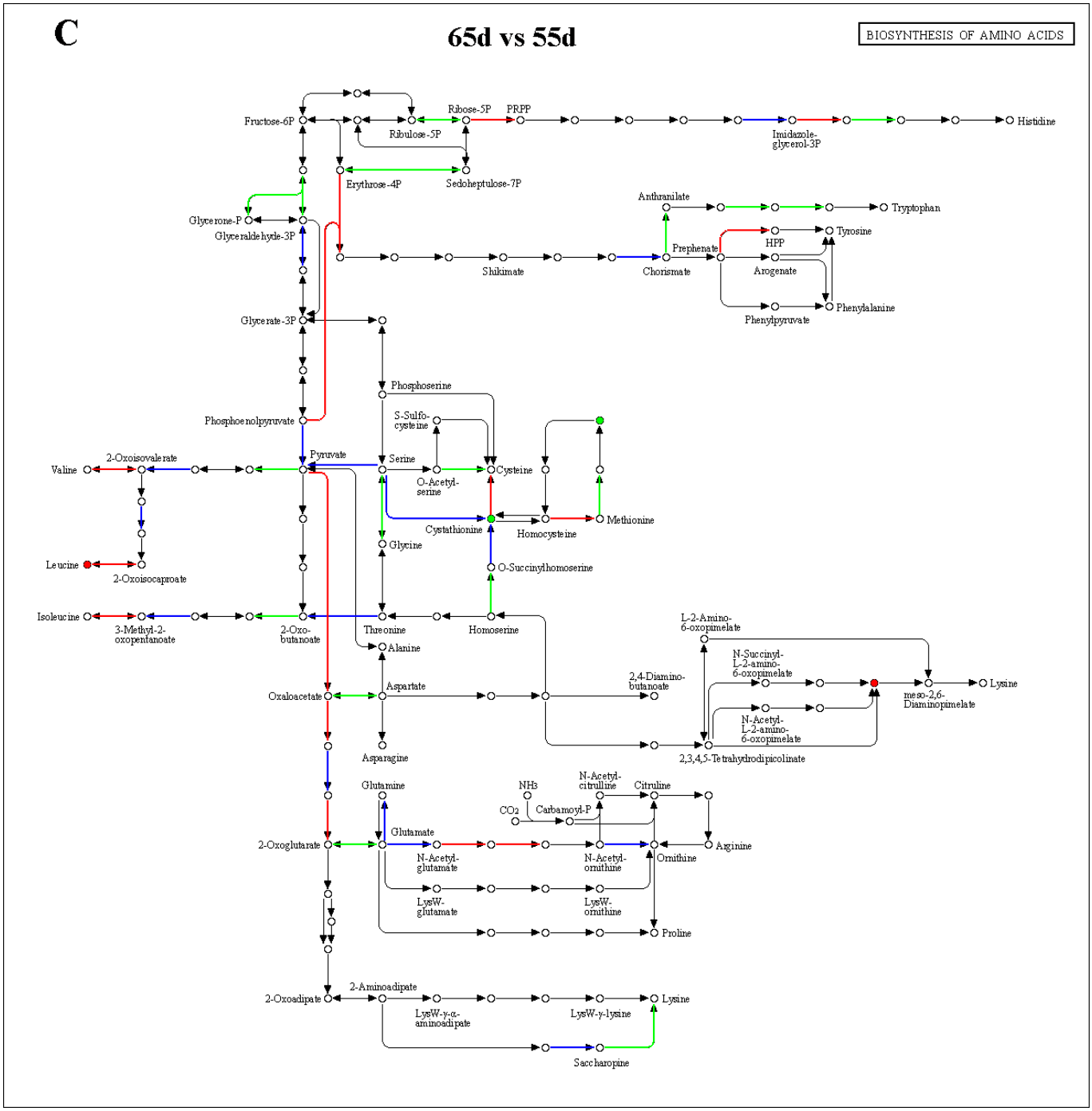

Figure S1. Biosynthesis of amino acids.

The circles and arrows represent metabolites and genes, respectively; red: up-regulated, blue: both up-regulated and down-regulated; green: down-regulated.